Temperature control handle - Platinum

MADISON

11 420 220

Platinum	11 420 220-08
Chrome	11 420 220-00
Brushed Platinum	11 420 220-06
Durabrass (23kt Gold)	11 420 220-09

11 420 220

Temperature control handle - Platinum

MADISON

11 420 220

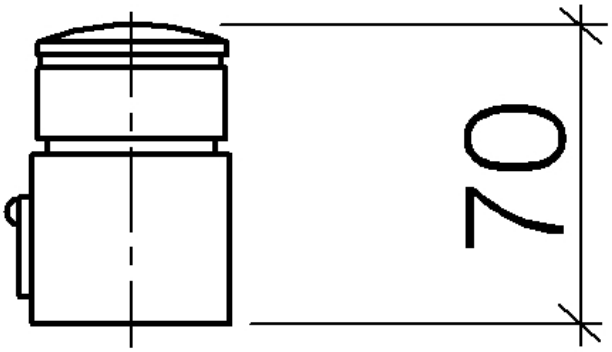

Temperature control handle - Platinum

MADISON

11 420 220

Parts for other finishes can be found here: Chrome

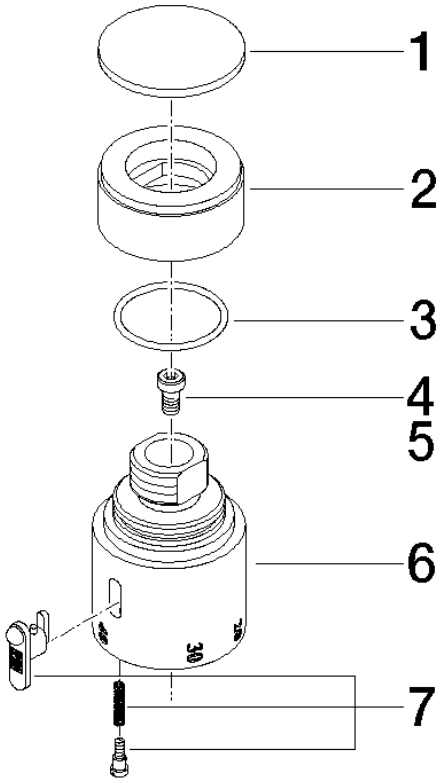

Spare parts list

No.	Item Number	Name	Quantity used	Delivery time
3	09 14 10 040 90	seal	1	2
4	90 30 30 027 00 90	screw	1	2
5	09 30 33 004 90	screw	1	2
7	90 21 33 020 00 90	handle	1	2

We reserve the right to change designs, product range and technical specifications without prior notice.
More information can be found at: www.dornbracht.com +49 (0) 2371 8899 900 mail@dornbracht.com